MURR ELEKTRONIK
stay connected

M12 male 0° shielded, D-cod. with cable EN

PUR 1x4xAWG22 shielded gn UL/CSA 5m

Customized printing and packaging
Ethernet CAT5
Male straight
M12, 4-pole
D-coded
shielded
Plastic housings with good resistance against chemicals and oils.
The resistance to aggressive media should be individually tested for your application. Further details on request.
Further cable lengths on request.

Link to Product

Illustration

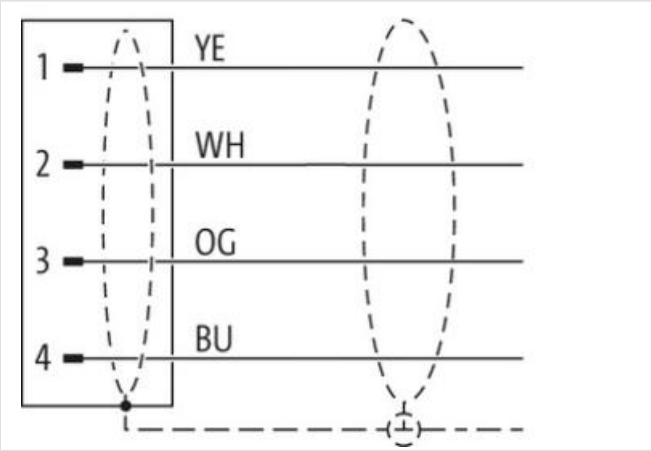

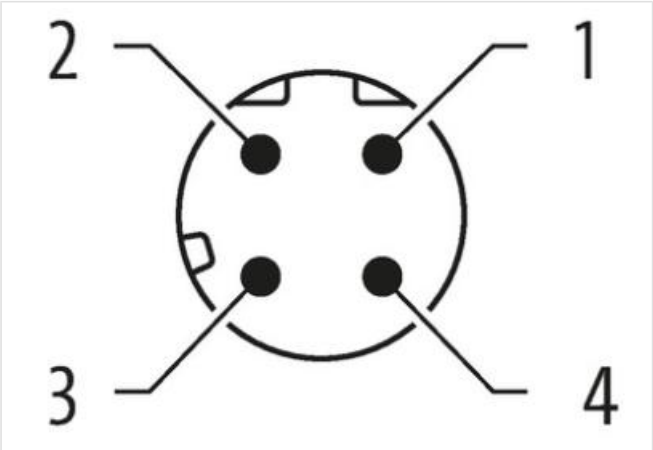

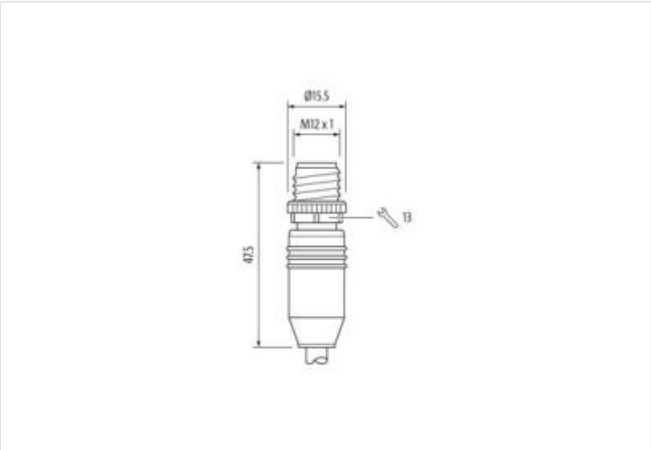

Product may differ from Image

Cable length	5 m

MURR ELEKTRONIK
stay connected

Side 1	
Mounting method	inserted, screwed
Coating contact	gold plated
Family construction form	M12
Material contact	Copper alloy
No. of poles	4
Side 2	
Coating contact	gold plated
Commercial data	
ECLASS-6.0	27061801
ECLASS-7.0	27061801
ECLASS-8.0	27061801
ECLASS-9.0	27061801
ECLASS-10.1	27060307
ECLASS-11.1	27060307
ECLASS-12.0	27060307
ETIM-5.0	EC001855
customs tariff number	85444290
GTIN	4048879840293
Packaging unit	1
Electrical data | Supply	
Operating voltage DC max.	60 V
Industrial communication	
Transfer parameters	CAT5, Class D (ISO/IEC 11801)
Device protection | Electrical	
Pollution Degree	3
Rated surge voltage	1,5 kV
Material group (IEC 60664-1)	I
Environmental characteristics | Climatic	
Operating temperature min.	-25 °C
Operating temperature max.	85 °C
Additional condition temperature range	depending on cable quality
Important installation notes	
Note on strain relief	Protect the connectors by suitable measures from mechanical loads, e.g. by the usage of cable ties.
Note on bending radius	**Attention:** Observe the permissible bending radii when laying cables, as the IP protection class can be endangered by excessive bending forces.
Installation | Cable	
Cable identification	794
Jacket Color	green
Type of Certificate	cURus
Amount stranding	1
Stranding	4 wires around Filler twisted
Cable shielding (type)	copper braid, tinned
Cable shielding (coverage)	85 %
Banding	Fleece, Foil
Filler	yes
wire arrangement	white, yellow, blue, orange
Cable weigth	75,87 g/m
Material jacket	PUR
Shore hardness jacket	89 Shore A
Freedom from ingredients (jacket)	lead-free, cadmium-free, CFC-free, halogen-free, silicone-free

Outer-diameter (jacket)	6,7 mm
Tolerance outer diameter (sheath)	± 5 %
Material inner jacket	FRNC
Color (inner jacket)	white
Material wire insulation	PE
Amount wires	4
Outer diameter insulation	1,55 mm
Outer diameter tolerance core insulation	± 5 %
Shore hardness wire insulation	65 Shore D
Ingredient freeness wire insulation	lead-free, CFC-free, halogen-free
Amount strands (wire)	7
Diameter of single wires	22 AWG
Conductor crosssection (wire)	22 AWG
Material conductor wire	Stranded copper wire, bare
Nominal voltage AC max.	300 V
Current load capacity (standard)	to DIN VDE 0298-4
Current load capacity min. wire	4,8 A
Characteristic impedance	100 Ω ± 15 %
Electrical resistance line constant wire	55 Ω/km @ 20 °C
AC withstand voltage (wire - wire)	2 kV @ 60 s
Electrical capacity line constant (wire - wire)	52000 pF/km
Power frequency withstand voltage (wire - jacket)	2 kV @ 60 s
AC withstand voltage (wire - shield)	2 kV @ 60 s
Min. operating temperature (static)	-40 °C
Max. operating temperature (fixed)	80 °C
Operating temperature min. (dynamic)	-30 °C
Operating temperature max. (dynamic)	70 °C
Flame resistance	UL 1581 § 1090 | IEC 60332-2-2 | UL 1581 § 1100 FT2
chemical resistance	Good, application-related testing
Gasoline resistance	Good, application-related testing
Oil resistance	Good, application-related testing | DIN EN 60811-404
Bending radius (fixed)	6 x Outer diameter
Bending radius (dynamic)	12 x Outer diameter