MURR ELEKTRONIK
stay connected

MAK VOLTAGE COMPARATOR MODULE

IN: 2 × 30VDC / OUT: 24V / 0,7A

2× 0...30 V DC (IN 1, IN 2)
Screw terminals
with bridge system
The DC- or AC-voltage comparator serves for evaluating analog voltages, generated by pressure, temperature or other sensors. The analog input values are compared to internal or external reference voltages to over or underflow. Outputs will be switched, dependent on defined limits. Features: - 2 separate measuring channels (no galvanic separation), (only by comparator service) -2 operating modes (comparator/window discriminator) – adjustable reference voltage (internal/external) per channel – adjustable output (inverted/not inverted) per channel, (only by comparator service) – compact design (12.4 mm) - higher switched current at output - output state display through LED – Easy configuration of the module via DIP switch

Link naar het product

Afbeelding

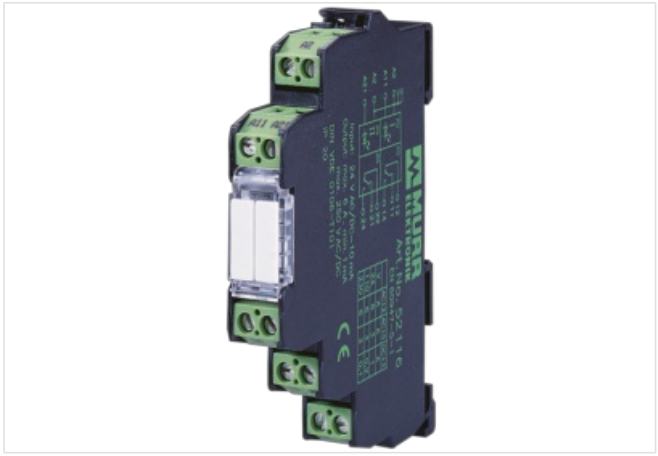

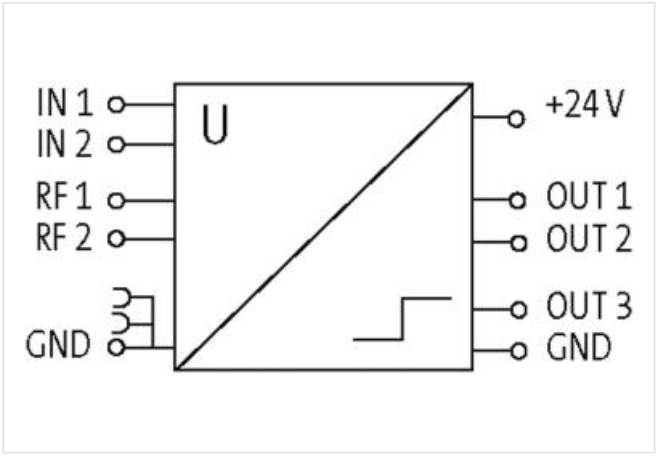

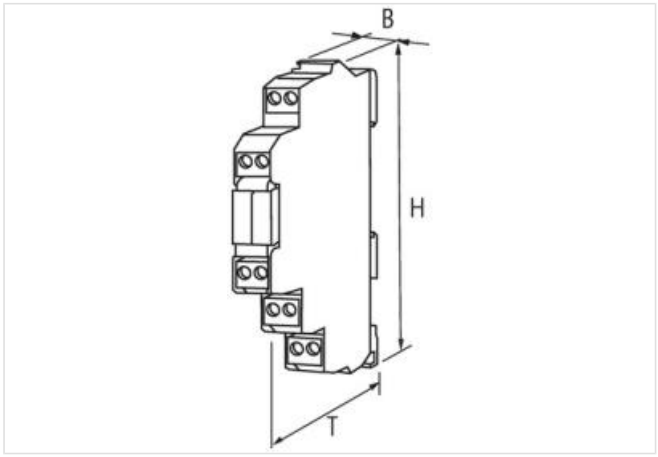

Product van afwijken van afbeelding

Commerciële gegevens

ECLASS-6.0	27210990

De informatie in dit datablad is met de grootst mogelijke zorg samengesteld.
Aansprakelijkheid beperkt tot grove nalatigheid voor de juistheid, volledigheid en actualiteit. Status: 2024-04-25

MURR ELEKTRONIK
stay connected

ECLASS-6.1	27261610
ECLASS-7.0	27261610
ECLASS-8.0	27261610
ECLASS-9.0	27261610
ECLASS-10.1	27261610
ECLASS-11.1	27261610
ECLASS-12.0	27261610
ETIM-5.0	EC002477
Douane tarief nummer	85437090
GTIN	4048879028547
Verpakkingseenheid	1
Electrical data | Supply	
Operating voltage DC min.	20 V
Operating voltage DC max.	30 V
Operating current max.	0,8 A
Open-circuit current	30 mA
Electrical data | Input	
Input voltage DC min.	0 V
Input voltage DC max.	30 V
Input resistance measuring input per channel min.	100 kΩ
Input resistance reference input per channel min.	100 kΩ
Hysteresis measuring input per channel	0,5 %
Hysteresis measuring input per channel max.	150 mV
Time constant measuring input per channel	10 ms
Electrical data | Output	
Number of transistor outputs	3
Output current per channel max.	0,7 A
Device protection | Electrical	
Short-circuit protected	yes
Pulse switching	yes
Mechanical data | Mounting data	
Mounting method	geschnappt
Suitable for mounting type	mounting rail, (EN 60715)
Height	90 mm
Width	12,4 mm
Depth	70 mm
Environmental characteristics | Climatic	
Operating temperature min.	0 °C
Operating temperature max.	50 °C
Connection type 5	
Connection	Screw terminals SK
Family construction form	terminal
Gender	female
No. of poles	2
PIN 1	0 V
PIN 2	0 V
Connection	Screw terminals SK
Family construction form	terminal
Gender	female

De informatie in dit datablad is met de grootst mogelijke zorg samengesteld.
Aansprakelijkheid beperkt tot grove nalatigheid voor de juistheid, volledigheid en actualiteit. Status: 2024-04-25

No. of poles	2
PIN 1	RF 1
PIN 2	RF 2
Connection	Screw terminals SK
Family construction form	terminal
Gender	female
No. of poles	2
PIN 1	In 1
PIN 2	In 2
Connection	Screw terminals SK
Family construction form	terminal
Gender	female
No. of poles	2
PIN 1	OT 3
PIN 2	OT 2
Connection	Screw terminals SK
Family construction form	terminal
Gender	female
No. of poles	2
PIN 1	OT 1
PIN 2	+ 24 V DC

De informatie in dit datablad is met de grootst mogelijke zorg samengesteld.
Aansprakelijkheid beperkt tot grove nalatigheid voor de juistheid, volledigheid en actualiteit. Status: 2024-04-25