MURR ELEKTRONIK
stay connected

**M12 male 0° A-cod. with cable shielded**

PUR 4x0.34 shielded bk UL/CSA+drag ch. 0.7m

Male straight
M12, 4-pole
A-coded
shielded
Plastic housings with good resistance against chemicals and oils.
The resistance to aggressive media should be individually tested for your application. Further details on request.
Further cable lengths on request.

Link naar het product

**Afbeelding**

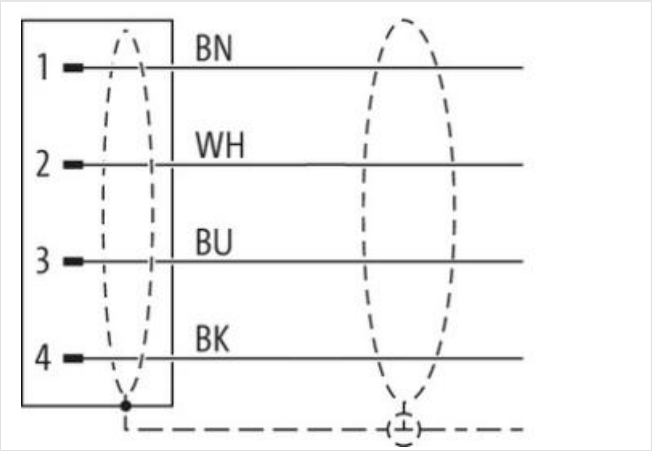


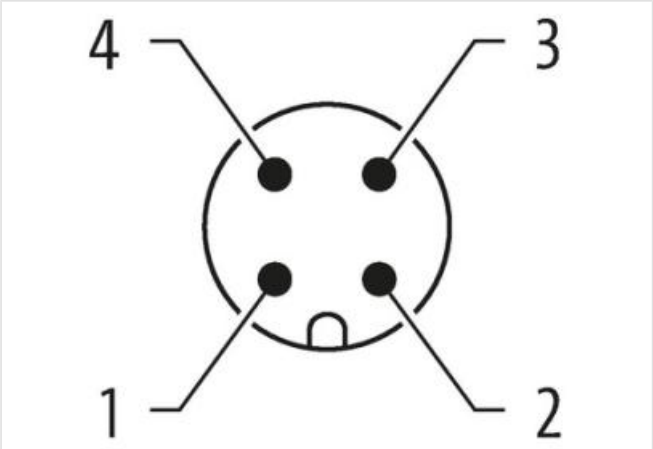


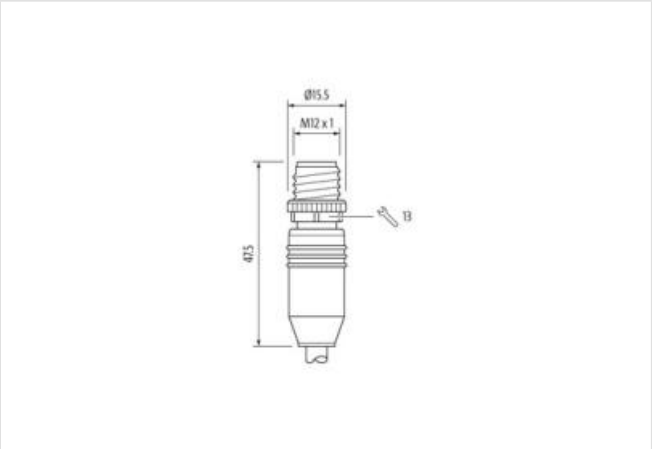


Product van afwijken van afbeelding

| | |
|---|---|
| Cable length | 0,7 m |
| **Side 1** | |
| Tightening torque | 0,6 Nm |

De informatie in dit datablad is met de grootst mogelijke zorg samengesteld.
Aansprakelijkheid beperkt tot grove nalatigheid voor de juistheid, volledigheid en actualiteit. Status: 2024-04-25

| | |
|---|---|
| Mounting method | inserted, screwed |
| Coating contact | gold plated |
| Family construction form | M12 |
| Thread | M12 x 1 |
| Coding | A |
| Material contact | Copper alloy |
| Material | PUR |
| No. of poles | 4 |
| Width across flats | SW13 |
| Degree of protection (EN IEC 60529) | IP65, IP66K, IP67 |
| **Side 2** | |
| Stripping length (jacket) | 20 mm |
| Coating contact | gold plated |
| **Commerciële gegevens** | |
| ECLASS-6.0 | 27279218 |
| ECLASS-6.1 | 27279218 |
| ECLASS-7.0 | 27279218 |
| ECLASS-8.0 | 27279218 |
| ECLASS-9.0 | 27060311 |
| ECLASS-10.1 | 27060311 |
| ECLASS-11.1 | 27060311 |
| ECLASS-12.0 | 27060311 |
| ETIM-5.0 | EC001855 |
| Douane tarief nummer | 85444290 |
| GTIN | 4048879758130 |
| Verpakkingseenheid | 1 |
| **Electrical data \| Supply** | |
| Operating voltage AC max. | 60 V |
| Operating voltage DC max. | 60 V |
| Operating voltage AC (UL-listed) | 30 V |
| Operating voltage DC (UL-listed) | 30 V |
| Current operating per contact max. | 4 A |
| **Diagnostics** | |
| Status indication LED | no |
| **Installation \| Connection** | |
| Stripping length (jacket) | 20 mm |
| Mounting set | M12 x 1 |
| **Device protection \| Electrical** | |
| Additional condition protection degree | inserted, screwed |
| Pollution Degree | 3 |
| Rated surge voltage | 1,5 kV |
| Material group (IEC 60664-1) | I |
| **Mechanical data \| Material data** | |
| Coating locking | Nickeled |
| Coating of fitting | nickel plated |
| Locking material | Zinc die-casting |
| Material screw connection | Zinc die-casting |
| **Mechanical data \| Mounting data** | |
| Mounting method | inserted, screwed, Shaking protection |
| **Environmental characteristics \| Climatic** | |

De informatie in dit datablad is met de grootst mogelijke zorg samengesteld.
Aansprakelijkheid beperkt tot grove nalatigheid voor de juistheid, volledigheid en actualiteit. Status: 2024-04-25

| | |
|---|---|
| Operating temperature min. | -25 °C |
| Operating temperature max. | 85 °C |
| Additional condition temperature range | depending on cable quality |
| **Conformity** | |
| Product standard | DIN EN 61076-2-101 (M12) |
| **Installation \| Cable** | |
| Cable identification | 641 |
| Cable Type | 3 |
| Jacket Color | black |
| Type of Certificate | cURus |
| Amount stranding | 1 |
| Stranding | 4 wires twisted |
| Cable shielding (type) | copper braid, tinned |
| Cable shielding (coverage) | 80 % |
| Banding | Fleece, Foil |
| wire arrangement | brown, black, blue, white |
| No. of bending cycles (C-track) | 5 Mio. @ 25 °C |
| Cable weigth | 50,6 g/m |
| Material jacket | PUR |
| Shore hardness jacket | 90 ± 5 Shore A |
| Freedom from ingredients (jacket) | lead-free, cadmium-free, CFC-free, halogen-free, silicone-free |
| Outer-diameter (jacket) | 5,3 mm |
| Tolerance outer diameter (sheath) | ± 5 % |
| Material wire insulation | PP |
| Amount wires | 4 |
| Outer diameter insulation | 1,25 mm |
| Outer diameter tolerance core insulation | ± 5 % |
| Shore hardness wire insulation | 70 ± 5 Shore D |
| Ingredient freeness wire insulation | lead-free, cadmium-free, CFC-free, halogen-free, silicone-free |
| Amount strands (wire) | 42 |
| Diameter of single wires | 0,1 mm |
| Conductor crosssection (wire) | 0,34 mm² |
| Material conductor wire | Stranded copper wire, bare |
| Conductor type (wire) | strand class 6 |
| Traversing distance (C-track) | 5 m @ 25 °C \| horizontal |
| Current load capacity (standard) | to DIN VDE 0298-4 |
| Current load capacity min. wire | 4,8 A |
| Electrical resistance line constant wire | 57 Ω/km @ 20 °C |
| Nominal voltage power AC max. | 300 V |
| AC withstand voltage power (wire - shield) | 2 kV @ 60 s |
| Power frequency withstand voltage power (wire - jacket) | 2 kV @ 60 s |
| AC withstand voltage power (wire - wire) | 2 kV @ 60 s |
| Min. operating temperature (static) | -40 °C |
| Max. operating temperature (fixed) | 80 °C / 90 °C @ 10000 h Operation |
| Operating temperature min. (dynamic) | -25 °C |
| Operating temperature max. (dynamic) | 80 °C / 90 °C @ 10000 h Operation |
| UV resistance | DIN EN ISO 4892-2 A |
| Flame resistance | IEC 60332-2-2 \| UL 1581 § 1090 \| UL 1581 § 1100 FT2 |
| chemical resistance | Good, application-related testing |
| Gasoline resistance | Good, application-related testing |
| Oil resistance | DIN EN 60811-404 \| Good, application-related testing |
| Bending radius (fixed) | 5 x Outer diameter |

De informatie in dit datablad is met de grootst mogelijke zorg samengesteld.
Aansprakelijkheid beperkt tot grove nalatigheid voor de juistheid, volledigheid en actualiteit. Status: 2024-04-25

| | |
|---|---|
| Bending radius (dynamic) | 10 x Outer diameter |
| No. of torsion cycles | 2 Mio. |
| Torsion speed | 35 cycles/min |
| Torsion stress | ± 30 °/m |

De informatie in dit datablad is met de grootst mogelijke zorg samengesteld.
Aansprakelijkheid beperkt tot grove nalatigheid voor de juistheid, volledigheid en actualiteit. Status: 2024-04-25