MURR ELEKTRONIK
stay connected

M12 male 0° A-cod. with cable

PUR AWG24+22 shielded vt UL/CSA+drag ch. 5m

DeviceNet, CANopen
Male straight
M12, 5-pole
Plastic housings with good resistance against chemicals and oils.
The resistance to aggressive media should be individually tested for your application. Further details on request.
Further cable lengths on request.

Link naar het product

Afbeelding

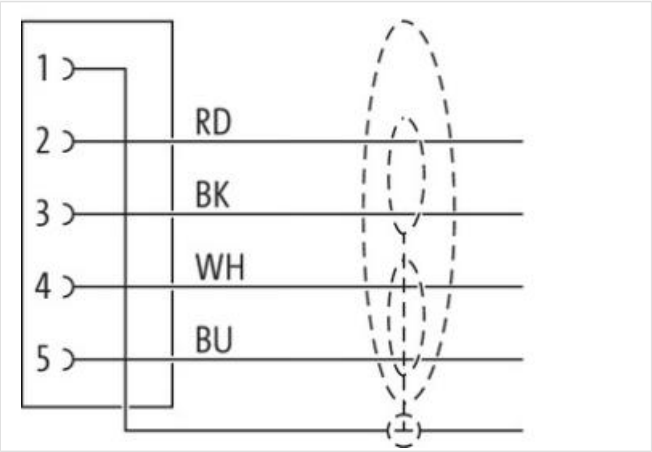

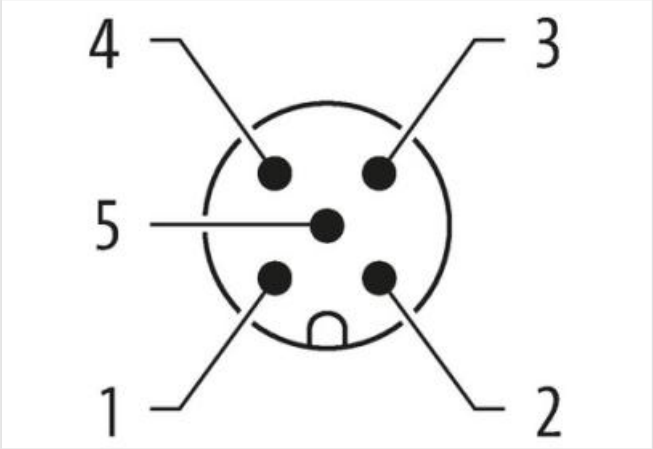

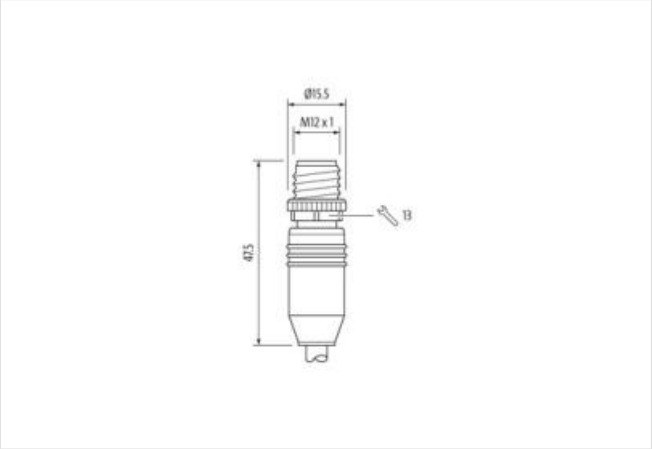

Product van afwijken van afbeelding

Cable length	5 m
Side 1	
Tightening torque	0,6 Nm

De informatie in dit datablad is met de grootst mogelijke zorg samengesteld.
Aansprakelijkheid beperkt tot grove nalatigheid voor de juistheid, volledigheid en actualiteit. Status: 2024-04-24

Mounting method	inserted, screwed
Family construction form	M12
Thread	M12 x 1
Coding	A
Material	PUR
Width across flats	SW13
Degree of protection (EN IEC 60529)	IP65, IP66K, IP67
Side 2	
Stripping length (jacket)	20 mm
Commerciële gegevens	
ECLASS-6.0	27061801
ECLASS-7.0	27061801
ECLASS-8.0	27061801
ECLASS-9.0	27061801
ECLASS-10.1	27060307
ECLASS-11.1	27060307
ECLASS-12.0	27060307
ETIM-5.0	EC001855
Douane tarief nummer	85444290
GTIN	4048879200875
Verpakkingseenheid	1
Electrical data | Supply	
Operating voltage AC max.	60 V
Operating voltage DC max.	60 V
Operating voltage AC (UL-listed)	30 V
Operating voltage DC (UL-listed)	30 V
Current operating per contact max.	4 A
Installation | Connection	
Stripping length (jacket)	20 mm
Mounting set	M12 x 1
Device protection | Electrical	
Additional condition protection degree	inserted, screwed
Pollution Degree	3
Rated surge voltage	1,5 kV
Material group (IEC 60664-1)	I
Mechanical data	
Contour for corrugated hose	without
Mechanical data | Material data	
Coating locking	Nickeled
Coating of fitting	nickel plated
Locking material	Zinc die-casting
Material screw connection	Zinc die-casting
Mechanical data | Mounting data	
Mounting method	inserted, screwed, Shaking protection
Environmental characteristics | Climatic	
Operating temperature min.	-25 °C
Operating temperature max.	85 °C
Additional condition temperature range	depending on cable quality
Conformity	
Product standard	DIN EN 61076-2-101 (M12)

De informatie in dit datablad is met de grootst mogelijke zorg samengesteld.
Aansprakelijkheid beperkt tot grove nalatigheid voor de juistheid, volledigheid en actualiteit. Status: 2024-04-24

MURR ELEKTRONIK
stay connected

Installation | Cable	
Cable identification	803
Jacket Color	violet
Type of Certificate	cURus
Amount stranding	1
Stranding	2 wires twisted
Amount stranding (type 2)	1
Stranding (type 2)	2 Stranded joints twisted
Cable shielding (type)	copper braid, tinned
Cable shielding (coverage)	65 %
Banding	Foil
Drain wire (cross-section)	22 AWG
wire arrangement	(white, blue), (black, red)
No. of bending cycles (C-track)	1 Mio.
Cable weigth	63,12 g/m
Material jacket	PUR
Shore hardness jacket	90 ± 5 Shore A
Freedom from ingredients (jacket)	lead-free, cadmium-free, CFC-free, halogen-free, silicone-free
Outer-diameter (jacket)	6,9 mm
Tolerance outer diameter (sheath)	± 5 %
Material wire insulation	PE
Amount wires	2
Outer diameter insulation	2,1 mm
Outer diameter tolerance core insulation	± 5 %
Shore hardness wire insulation	64 ± 5 Shore D
Ingredient freeness wire insulation	lead-free, CFC-free, halogen-free
Amount strands (wire)	19
Diameter of single wires	24 AWG
Conductor crosssection (wire)	24 AWG
Drain wire (cross-section)	22 AWG
Material conductor wire	copper stranded wire, tinned
Electrical function wire	Data
Material wire insulation (Data)	PE
Outer diameter wire insulation (Data)	1,5 mm
Tolerance outer diameter wire insulation (data)	± 53 %
Ingredient freeness wire insulation (Data)	lead-free, CFC-free, halogen-free
Amount wires (Data)	2
Amount strands wire (Data)	19
Diameter of single wires (Data)	22 AWG
Conductor crosssection wire (Data)	22 AWG
Material conductor wire (Data)	copper stranded wire, tinned
Electrical function wire (data)	Power
Traversing distance (C-track)	5 m
Current load capacity (standard)	to DIN VDE 0298-4
Current load capacity min. wire	4,5 A
Current load capacity min. Wire (Data)	6 A
Electrical function wire	Data
Electrical function wire (data)	Power
Characteristic impedance	120 Ω ± 10 % @ 1 MHz
Electrical resistance line constant wire	78 Ω/km
Electrical resistance coating wire (Data)	54 Ω/km
Nominal voltage power AC max.	300 V
Electric capacitance (power)	40000 pF/km

De informatie in dit datablad is met de grootst mogelijke zorg samengesteld.
Aansprakelijkheid beperkt tot grove nalatigheid voor de juistheid, volledigheid en actualiteit. Status: 2024-04-24

AC withstand voltage power (wire - shield)	2 kV @ 60 s
AC withstand voltage power (wire - wire)	2 kV @ 60 s
Min. operating temperature (static)	-40 °C
Max. operating temperature (fixed)	80 °C
Operating temperature min. (dynamic)	-30 °C
Operating temperature max. (dynamic)	70 °C
Flame resistance	UL 1581 § 1100 FT2 | IEC 60332-2-2 | UL 1581 § 1090
chemical resistance	Good, application-related testing
Gasoline resistance	Good, application-related testing
Oil resistance	DIN EN 60811-404 | Good, application-related testing
Bending radius (installation)	x Outer diameter
Bending radius (fixed)	6 x Outer diameter
Bending radius (dynamic)	10 x Outer diameter
No. of torsion cycles	2 Mio.
Torsion speed	35 cycles/min
Torsion stress	± 30 °/m

De informatie in dit datablad is met de grootst mogelijke zorg samengesteld.
Aansprakelijkheid beperkt tot grove nalatigheid voor de juistheid, volledigheid en actualiteit. Status: 2024-04-24